"HOTEL SERIES 450 " ALUMINUM INTEGRAL WINDOW/PTAC LOUVER SYSTEM

LARGE MISSILE IMPACT ● +50 / -65

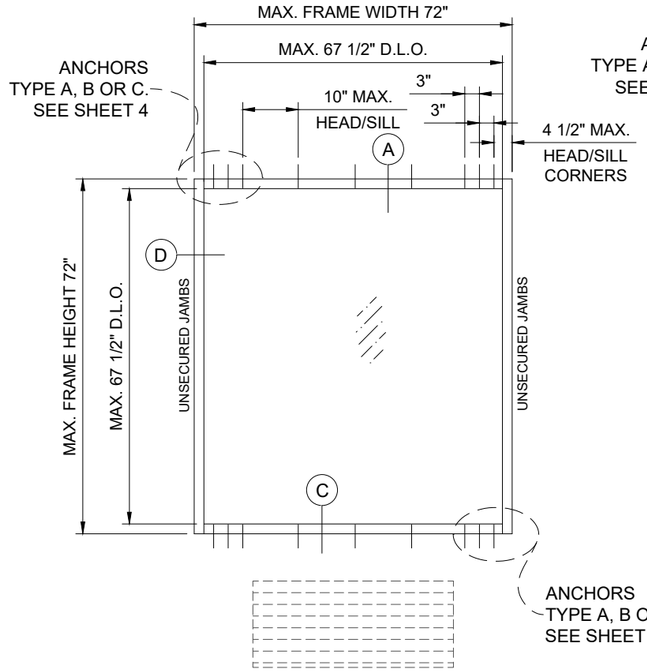

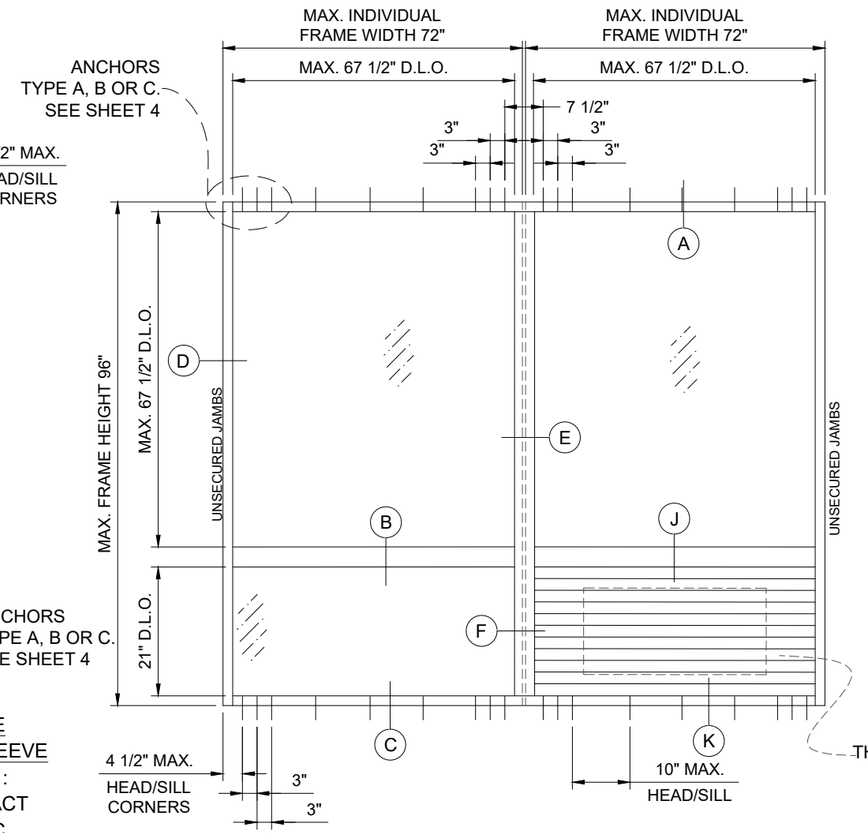

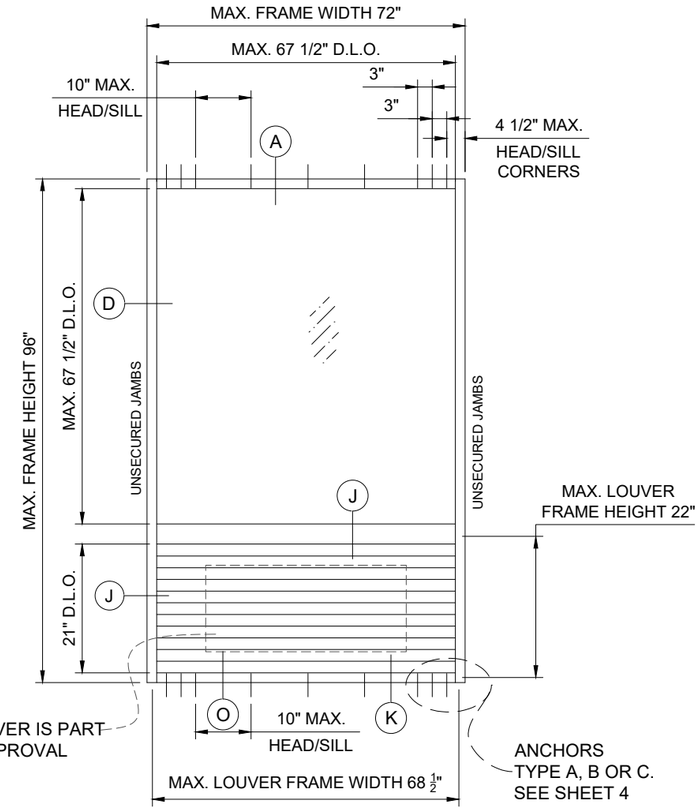

THIS PTAC LOUVER IS PART OF THIS APPROVAL

FOR PUNCHED OUT PTAC OPENINGS, SEE SEPARATE APPROVAL FOR LOUVER & SLEEVE CHAMPION-PTAC APPROVAL FLA #40680.1: SERIES "NEVERLEAK™" HURRICANE IMPACT PTAC LOUVER WITH "NEVERLEAK™" PTAC WALL SLEEVE ASSEMBLY

NOTE:

2026 FLORIDA BUILDING CODE (FBC), 9TH EDITION IS BASED ON THE 2024 IBC (INTERNATIONAL BUILDING CODE).

CODES / STANDARDS USED:
2026 FLORIDA BUILDING CODE (FBC), 9TH EDITION ASTM E1300-16 ANSI/AWC NDS-2024 FOR WOOD CONSTRUCTION W/ 2015 SUPPLEMENT ALUMINUM DESIGN MANUAL, ADM1-2020

TESTS PERFORMED:	
TAS 202	AIR INFILTRATION, WATER PENETRATION, STRUCTURAL
ASTM E283	AIR INFILTRATION LEAKAGE
ASTM E331	WATER PENETRATION
ASTM E330	UNIFORM STATIC AIR PRESS. (STRUCTURAL)
(FBC 1626.2 , HVHZ) TAS 201 & 203 ASTM E1886/E1996	LARGE MISSILE IMPACT & CYCLIC LEVEL D

THIS PRODUCT HAS BEEN DESIGNED AND TESTED TO COMPLY WITH THE REQUIREMENTS OF THE FLORIDA BUILDING CODE 9TH EDITION (2026) INCLUDING HIGH VELOCITY HURRICANE ZONE (HVHZ).

WOOD BUCKS BY OTHERS, MUST BE ANCHORED PROPERLY TO TRANSFER LOADS TO THE STRUCTURE.

ANCHORS SHALL BE AS LISTED, SPACED AS SHOWN ON DETAILS, ANCHORS EMBEDMENT TO BASE MATERIAL SHALL BE BEYOND WALL DRESSING OR STUCCO.

ANCHORING OR LOADING CONDITIONS NOT SHOWN IN THESE DETAILS ARE NOT PART OF THIS APPROVAL.

A LOAD DURATION INCREASE IN ALLOWABLE STRESS IS USED IN DESIGN OF ANCHORS INTO WOOD ONLY.

MATERIALS INCLUDING BUT NOT LIMITED TO STEEL/METAL SCREWS, THAT COME INTO CONTACT WITH OTHER DISSIMILAR MATERIALS SHALL MEET THE REQUIREMENTS OF 2026 FLORIDA BLDG.

Digitally signed by Christopher Stanton
Date: 2026.10.14 06:20:33 -04'00'

MAX FRAME SIZE LOAD CAPACITY		
MAX. NOMINAL DIMS.		PSF
WIDTH (W)	FRAME HEIGHT	EXT.(+)/INT.(-)
72"	96"	+50 / -65

THIS SYSTEM IS RATED FOR LARGE & SMALL MISSILE IMPACT RESISTANT

NOTE:
1. LOUVERS SYSTEM IS TO BE INSTALLED IN A LOCATION WHERE THE ROOM BEHIND LOUVERS IS DESIGNED TO DRAIN WATER PENETRATING INTO THE ROOM AND THE ROOM WILL HOUSE WATER RESISTANT/WATER PROOF EQUIPMENT, COMPONENTS, OR SUPPLIES.
2. DEFLECTORS ARE TO DIRECT INTAKES & EXHAUST FOR INSTALLED IN WINDOW SLEEVE BEYOND. THEY HAVE NO EFFECT ON STRUCTURAL INTEGRITY OF LOUVER DESIGN

FL #46572.1

STANTON CHRISTOPHER STANTON LICENSE No 69316 STATE OF FLORIDA PROFESSIONAL ENGINEER

ENGINEER:
STANTON ENGINEERING, INC.
2101 NW BOCA RATON BLVD. SUITE #115
BOCA RATON, FL. 33431
561-393-1003
FLA. P.E. #69316

CHAMPION GLASS INC
4720 NW 15TH AVENUE, UNIT 4A,
FT. LAUDERDALE, FL. 33309
954-564-3435 - CHAMPION-GLASS.NET

PRODUCT:
"HOTEL SERIES 450 "
ALUM. INTEGRAL WINDOW/PTAC LOUVER SYSTEM
(IMPACT RATED)

PRODUCT APPROVAL #:
FL #46572.1

SCALE: NOTED
DATE: 07/06/2026
DWG NO. CHGL-450-2026

SHEET No:
01 OF 12

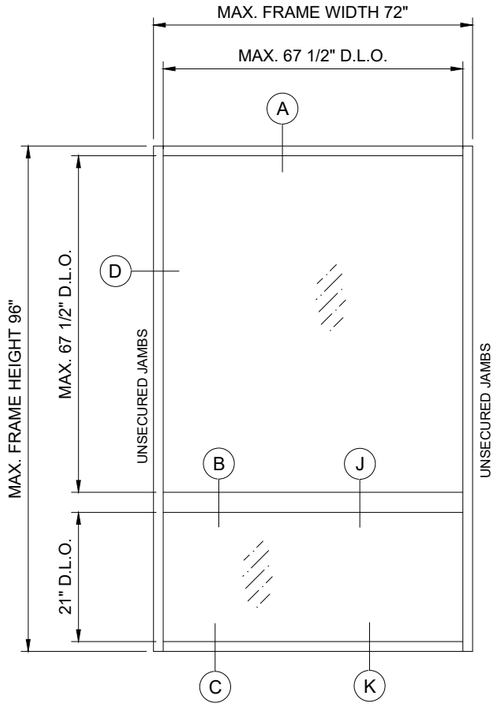

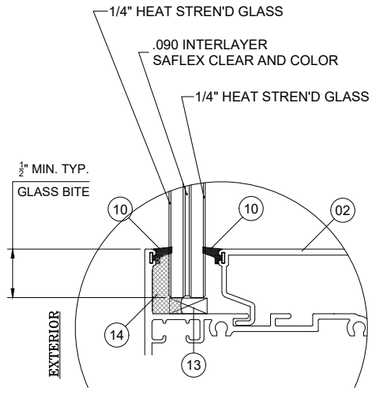

GLASS TYPE 'A'
IMPACT "LAMINATED" GLASS
9/16" OVERALL GLASS THICKNESS

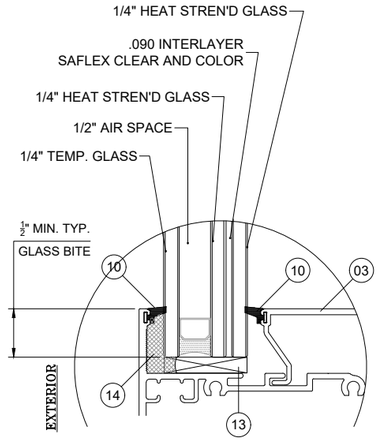

GLASS TYPE 'B'
IMPACT "LAMINATED INSULATED" GLASS
1-5/16" OVERALL GLASS THICKNESS

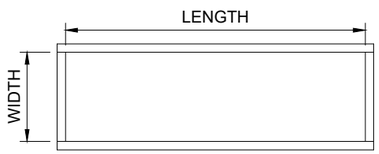

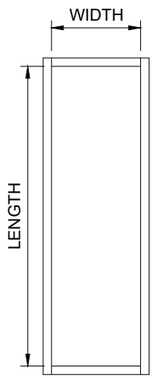

NOTE:
WIDTH AND LENGTH DIMENSIONS CAN BE ORIENTED VERTICALLY OR HORIZONTALLY AS SHOWN ABOVE.

STAMP
CHRISTOPHER STANTON
LICENSE
No 69316
STATE OF
FLORIDA
PROFESSIONAL ENGINEER

ENGINEER:
STANTON ENGINEERING, INC.
2101 NW BOCA RATON BLVD. SUITE #115
BOCA RATON, FL. 33431
561-393-1003
FLA. P.E. #69316

CHAMPION GLASS INC
4720 NW 15TH AVENUE, UNIT 4A,
FT. LAUDERDALE, FL. 33309
954-564-3435 · CHAMPION-GLASS.NET

PRODUCT:
"HOTEL SERIES 450"
ALUM. INTEGRAL WINDOW/PTAC
LOUVER SYSTEM
(IMPACT RATED)

PRODUCT APPROVAL #:
FL #46572.1

SCALE: NOTED
DATE: 07/06/2026
DWG NO. CHGL-450-2026

SHEET No:
02 OF 12

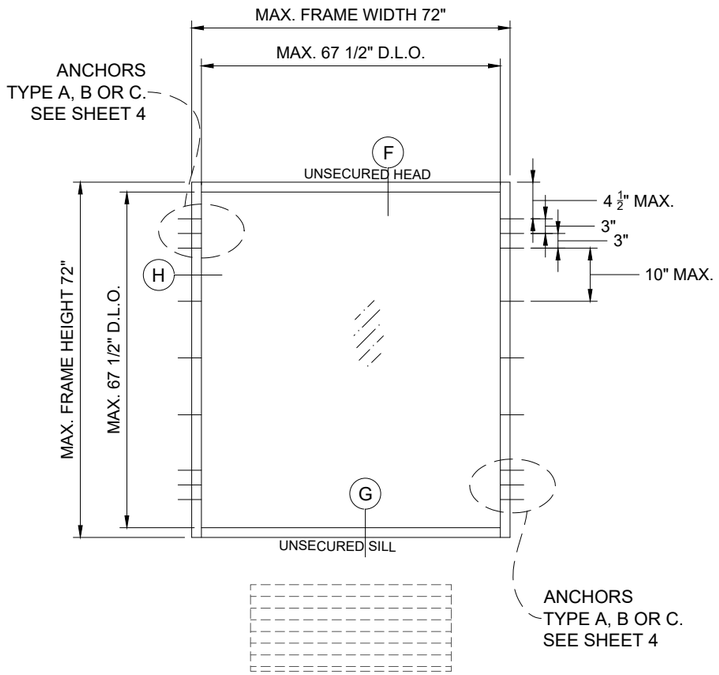

FOR PUNCHED OUT PTAC OPENINGS, SEE SEPARATE APPROVAL FOR LOUVER & SLEEVE

CHAMPION-PTAC APPROVAL FLA #40680.1: SERIES "NEVERLEAK^{TM}" HURRICANE IMPACT PTAC LOUVER WITH "NEVERLEAK^{TM}" PTAC WALL SLEEVE ASSEMBLY

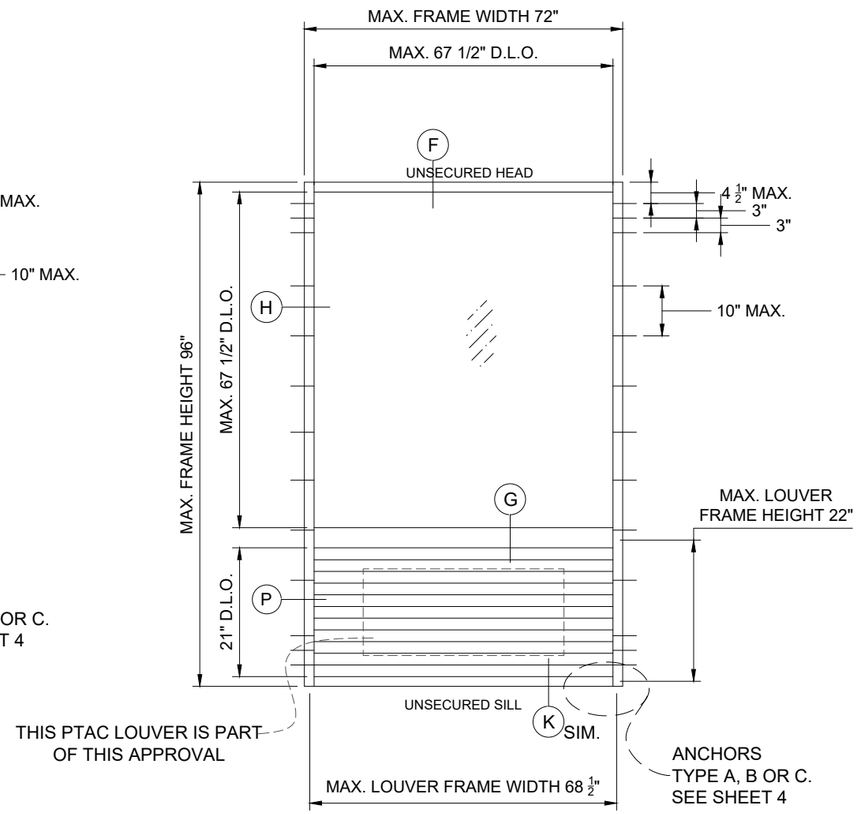

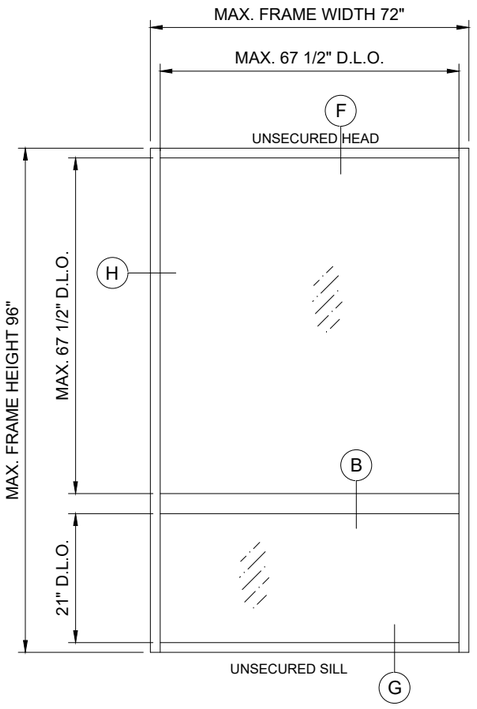

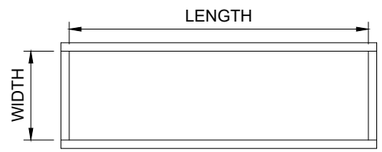

NOTE:
WIDTH AND LENGTH DIMENSIONS CAN BE ORIENTED VERTICALLY OR HORIZONTALLY AS SHOWN ABOVE.

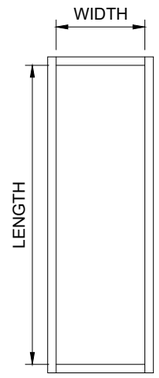

STAMP
CHRISTOPHER STANTON
LICENSE
No 69316
STATE OF
FLORIDA
PROFESSIONAL ENGINEER

ENGINEER:
STANTON ENGINEERING, INC.
2101 NW BOCA RATON BLVD. SUITE #115
BOCA RATON, FL. 33431
561-393-1003
FLA. P.E. #69316

CHAMPION GLASS INC
4720 NW 15TH AVENUE, UNIT 4A,
FT. LAUDERDALE, FL. 33309
954-564-3435 · CHAMPION-GLASS.NET

PRODUCT:
"HOTEL SERIES 450"
ALUM. INTEGRAL WINDOW/PTAC
LOUVER SYSTEM
(IMPACT RATED)

PRODUCT APPROVAL #:
FL #46572.1

SCALE: NOTED
DATE: 07/06/2026
DWG NO. CHGL-450-2026

ANCHOR LOAD CAPACITY - PSF EXT. (+) & INT. (-)					
NOMINAL DIMS.		ANCHOR TYPES			
WIDTH (W)	FRAME HEIGHT	'A2'	'AA2'	'B2'	'C2'
24"	72"	65.0	65.0	65.0	65.0
30"		65.0	65.0	65.0	65.0
36"		65.0	65.0	65.0	65.0
42"		65.0	65.0	65.0	65.0
48"		59.0	65.0	65.0	65.0
54"		52.4	62.8	65.0	65.0
60"		47.2	56.5	65.0	65.0
66"		42.9	51.4	65.0	65.0
72"		39.3	47.1	65.0	65.0
24"	78"	65.0	65.0	65.0	65.0
30"		65.0	65.0	65.0	65.0
36"		65.0	65.0	65.0	65.0
42"		62.2	65.0	65.0	65.0
48"		54.5	65.0	65.0	65.0
54"		48.4	58.0	65.0	65.0
60"		43.6	52.2	65.0	65.0
66"		39.6	47.4	65.0	65.0
72"		36.3	43.5	65.0	61.9
24"	84"	65.0	65.0	65.0	65.0
30"		65.0	65.0	65.0	65.0
36"		65.0	65.0	65.0	65.0
42"		57.8	65.0	65.0	65.0
48"		50.6	60.6	65.0	65.0
54"		45.0	53.8	65.0	65.0
60"		40.5	48.5	65.0	65.0
66"		36.8	44.1	65.0	62.8
72"		33.7	40.4	65.0	57.5
24"	90"	65.0	65.0	65.0	65.0
30"		65.0	65.0	65.0	65.0
36"		62.9	65.0	65.0	65.0
42"		53.9	64.6	65.0	65.0
48"		47.2	56.5	65.0	65.0
54"		42.0	50.3	65.0	65.0
60"		37.8	45.2	65.0	64.4
66"		34.3	41.1	65.0	58.6
72"		31.5	37.7	65.0	53.7
24"	96"	65.0	65.0	65.0	65.0
30"		65.0	65.0	65.0	65.0
36"		59.0	65.0	65.0	65.0
42"		50.6	60.6	65.0	65.0
48"		44.3	53.0	65.0	65.0
54"		39.3	47.1	65.0	65.0
60"		35.4	42.4	65.0	60.4
66"		32.2	38.5	65.0	54.9
72"		29.5	35.3	65.0	50.3

ANCHOR LOAD CAPACITY - PSF EXT. (+) & INT. (-)					
NOMINAL DIMS.		ANCHOR TYPES			
WIDTH (W)	FRAME HEIGHT	'A3'	'AA3'	'B3'	'C3'
24"	72"	65.0	65.0	65.0	65.0
30"		65.0	65.0	65.0	65.0
36"		65.0	65.0	65.0	65.0
42"		65.0	65.0	65.0	65.0
48"		65.0	65.0	65.0	65.0
54"		65.0	65.0	65.0	65.0
60"		65.0	65.0	65.0	65.0
66"		64.4	65.0	65.0	65.0
72"		59.0	65.0	65.0	65.0
24"	78"	65.0	65.0	65.0	65.0
30"		65.0	65.0	65.0	65.0
36"		65.0	65.0	65.0	65.0
42"		65.0	65.0	65.0	65.0
48"		65.0	65.0	65.0	65.0
54"		65.0	65.0	65.0	65.0
60"		65.0	65.0	65.0	65.0
66"		59.4	65.0	65.0	65.0
72"		54.5	65.0	65.0	65.0
24"	84"	65.0	65.0	65.0	65.0
30"		65.0	65.0	65.0	65.0
36"		65.0	65.0	65.0	65.0
42"		65.0	65.0	65.0	65.0
48"		65.0	65.0	65.0	65.0
54"		65.0	65.0	65.0	65.0
60"		60.7	65.0	65.0	65.0
66"		55.2	65.0	65.0	65.0
72"		50.6	60.6	65.0	65.0
24"	90"	65.0	65.0	65.0	65.0
30"		65.0	65.0	65.0	65.0
36"		65.0	65.0	65.0	65.0
42"		65.0	65.0	65.0	65.0
48"		65.0	65.0	65.0	65.0
54"		62.9	65.0	65.0	65.0
60"		56.6	65.0	65.0	65.0
66"		51.5	61.7	65.0	65.0
72"		47.2	56.5	65.0	65.0
24"	96"	65.0	65.0	65.0	65.0
30"		65.0	65.0	65.0	65.0
36"		65.0	65.0	65.0	65.0
42"		65.0	65.0	65.0	65.0
48"		65.0	65.0	65.0	65.0
54"		59.0	65.0	65.0	65.0
60"		53.1	63.6	65.0	65.0
66"		48.3	57.8	65.0	65.0
72"		44.3	53.0	65.0	65.0

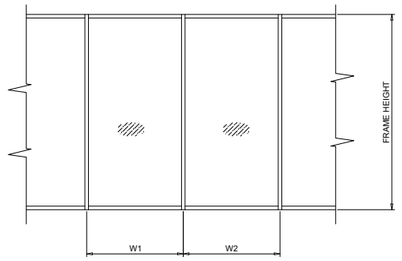

$$\text{WIDTH (W)} = \frac{W1 + W2}{2}$$

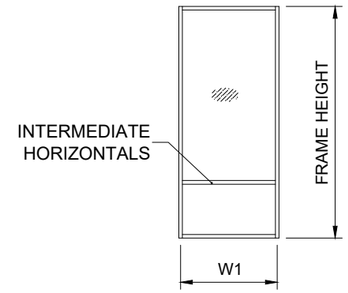

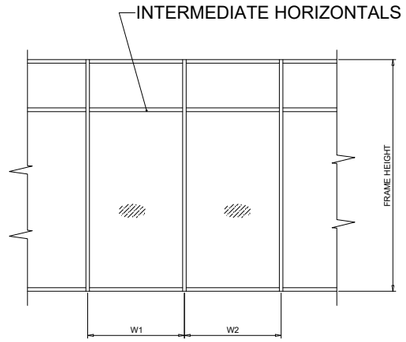

$$\text{WIDTH (W)} = \frac{W1 + W2}{2}$$

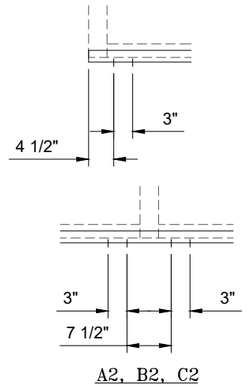

A2, B2, C2

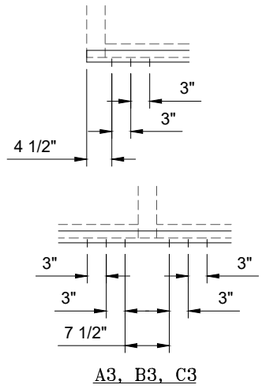

A3, B3, C3

TYPICAL ANCHORS: SEE ELEV. FOR SPACING

TYPE 'A' 1/4" ITW TAPCONS OR DEWALT ULTRACON+
INTO 2BY WOOD BUCKS OR WOOD STRUCTURES
(NO. 2 SOUTHERN YELLOW PINE)
1-1/2" MIN. PENETRATION INTO WOOD

TYPE 'AA' 1/4" ITW TAPCONS OR DEWALT ULTRACON+
DIRECTLY INTO CBS (GROUT FILLED OR HOLLOW)
1-3/4" MIN. EMBEDMENT
OR

THRU 1BY WOOD BUCKS INTO CBS
1-1/4" MIN. EMBED INTO HOLLOW BLOCK
1-3/4" MIN. EMBED INTO GROUT FILLED BLOCK

TYPE 'B' 1/4" ITW TAPCONS OR DEWALT ULTRACON+
DIRECTLY INTO 3000 PSI MIN. CONCRETE
1-3/4" MIN. EMBED INTO CONC.

OR

THRU 1BY WOOD BUCKS INTO CONC.
1-3/4" MIN. EMBED INTO CONCRETE

TYPE 'C' #14 SMS OR 1/4" SELF DRILLING SCREWS
INTO METAL STRUCTURES (STEEL OR ALUMINUM)
MIN. (3) THREADS THROUGH METAL THICKNESS
STEEL : 18 GA MIN.
ALUMINUM : .080" THICK, 6063-T6 MIN.

TYPICAL ANCHOR EDGE DISTANCE
INTO CONCRETE AND MASONRY = 2-1/2" MIN.
INTO WOOD STRUCTURE = 1" MIN.
INTO METAL STRUCTURE = 1/2" MIN.

NOTE:
ALTERNATE ANCHOR TYPES/ CONDITIONS SHALL BE DESIGNED BY A FLORIDA LICENSED ENGINEER FOR PROJECT SPECIFIC DESIGN CRITERIA BASED ON SEALANT MANUFACTURERS' TECHNICAL DATA.

WOOD BUCKS AND METAL STRUCTURES, NOT BY CHAMPION GLASS, MUST SUPPORT LOADS IMPOSED BY GLAZING SYSTEM AND TRANSFER THEM TO THE BUILDING STRUCTURE. FRAME BITE INSIDE RECEPTORS MIN. 7/16".

STAMP
CHRISTOPHER STANTON
LICENSE
No 69316
STATE OF
FLORIDA
PROFESSIONAL ENGINEER

ENGINEER:
STANTON ENGINEERING, INC.
2101 NW BOCA RATON BLVD. SUITE #115
BOCA RATON, FL. 33431
561-393-1003
FLA. P.E. #69316

CHAMPION GLASS INC
4720 NW 15TH AVENUE, UNIT 4A,
FT. LAUDERDALE, FL. 33309
954-564-3435 · CHAMPION-GLASS.NET

PRODUCT:
"HOTEL SERIES 450"
ALUM. INTEGRAL WINDOW/PTAC
LOUVER SYSTEM
(IMPACT RATED)

PRODUCT APPROVAL #:
FL #46572.1

SCALE: NOTED
DATE: 07/06/2026
DWG NO. CHGL-450-2026

SHEET No: 04 OF 12

NOTE:
SHIM SPACE AT HEAD AND SILL CAN BE UP TO 1/4" WITHOUT REQUIRING ADDITIONAL ENGINEERING.

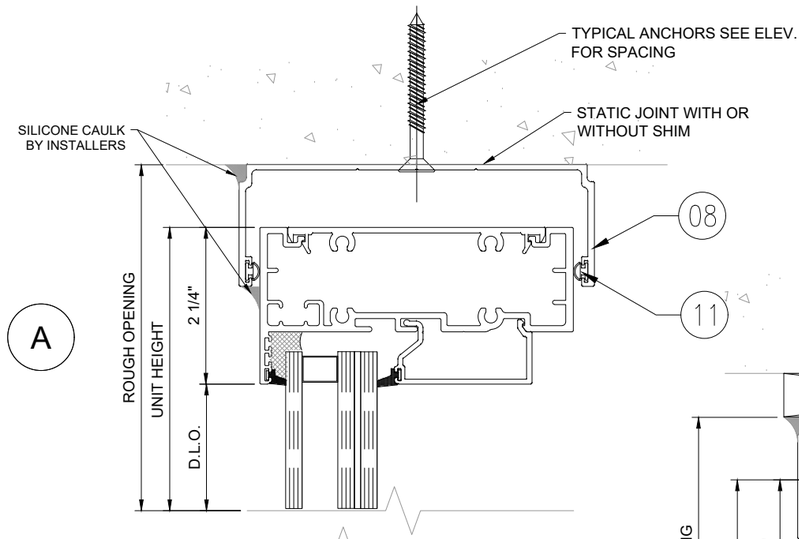

A

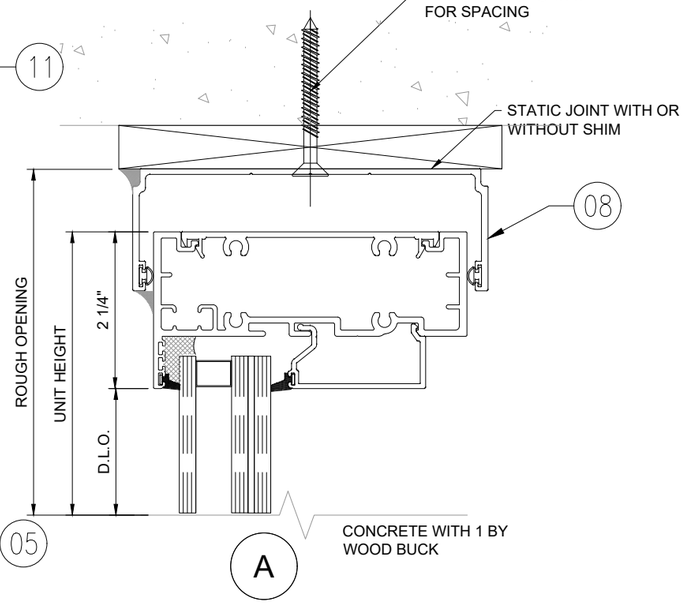

A

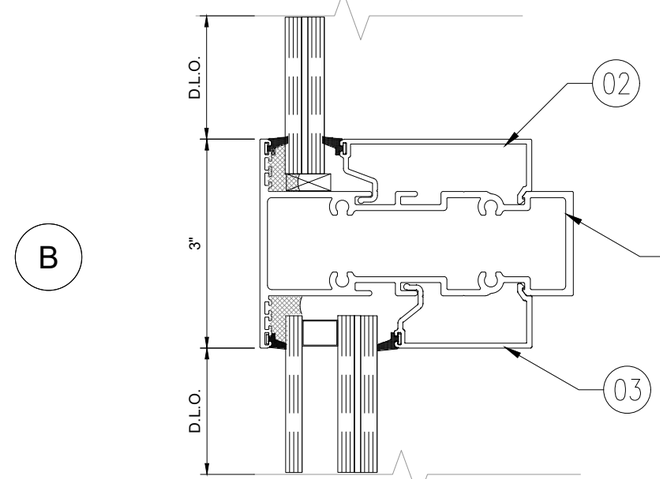

B

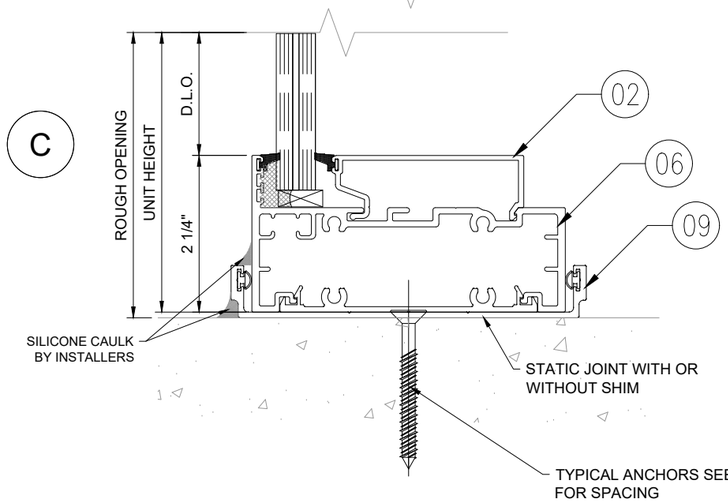

C

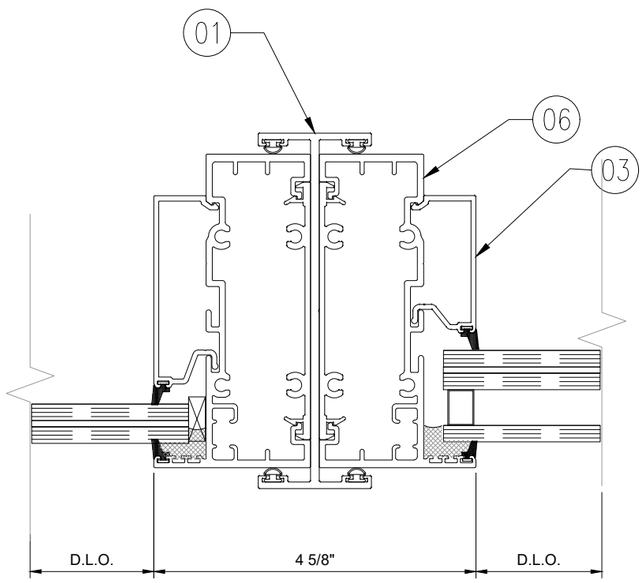

E

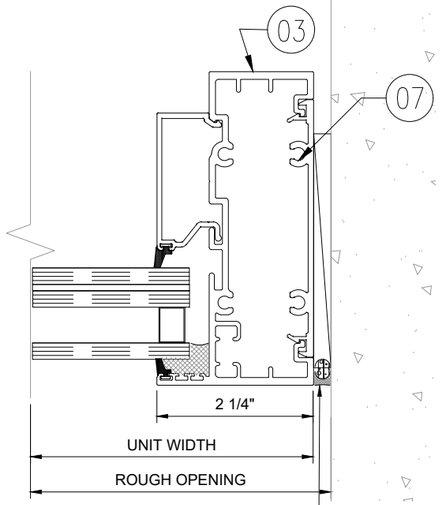

D

SILICONE SEALANT DOWSIL 790 OR EQUAL
NOTE:
ALTERNATE SEALANT SHALL BE DESIGNED BY A FLORIDA LICENSED ENGINEER FOR PROJECT SPECIFIC DESIGN CRITERIA BASED ON SEALANT MANUFACTURERS GUIDELINES.

CONCRETE OPTION 1

STAMP
CHRISTOPHER STANTON
LICENSE
No 69316
STATE OF
FLORIDA
PROFESSIONAL ENGINEER

ENGINEER:
STANTON ENGINEERING, INC.
2101 NW BOCA RATON BLVD. SUITE #115
BOCA RATON, FL. 33431
561-393-1003
FLA. P.E. #69316

CHAMPION GLASS INC
4720 NW 15TH AVENUE, UNIT 4A,
FT. LAUDERDALE, FL. 33309
954-564-3435 · CHAMPION-GLASS.NET

PRODUCT:
"HOTEL SERIES 450"
ALUM. INTEGRAL WINDOW/PTAC LOUVER SYSTEM
(IMPACT RATED)

PRODUCT APPROVAL #:
FL #46572.1

SCALE: NOTED
DATE: 07/06/2026
DWG NO. CHGL-450-2026

SHEET No:
05 OF 12

NOTE:
SHIM SPACE AT HEAD AND SILL CAN BE UP TO 1/4" WITHOUT REQUIRING ADDITIONAL ENGINEERING.

A

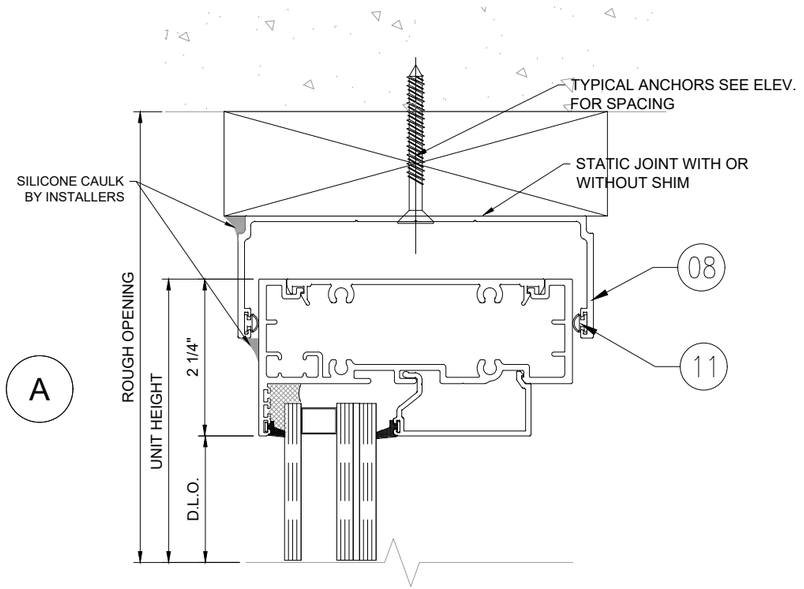

B

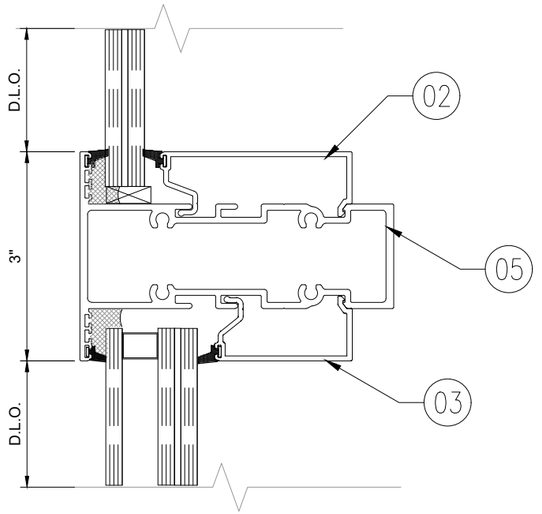

C

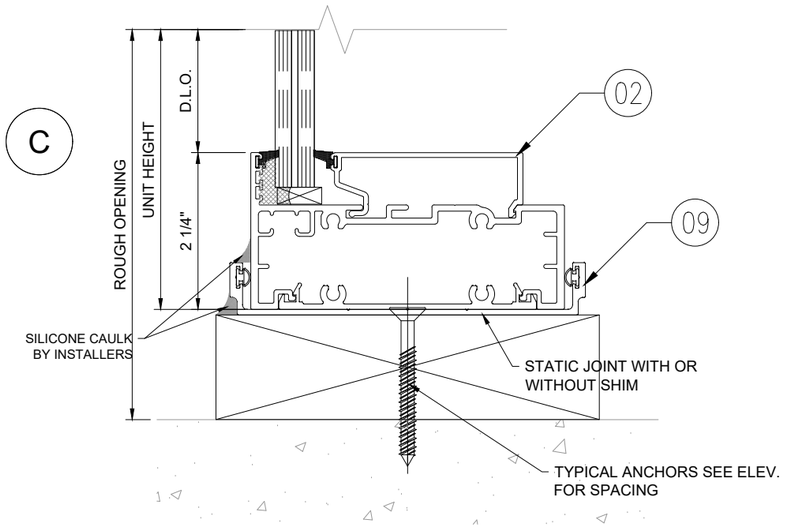

D

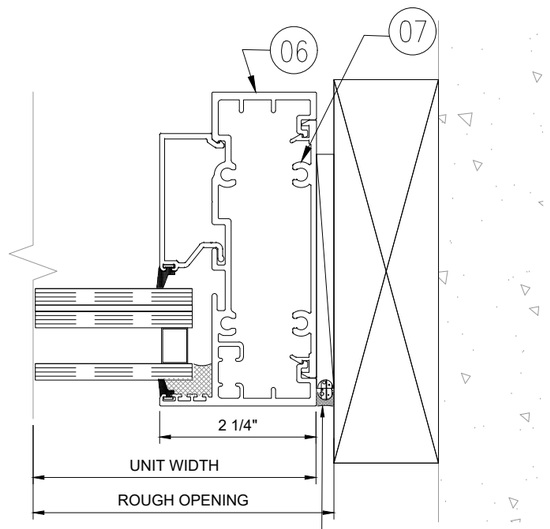

SILICONE SEALANT DOWSIL 790 OR EQUAL
NOTE:
ALTERNATE SEALANT SHALL BE DESIGNED BY A FLORIDA LICENSED ENGINEER FOR PROJECT SPECIFIC DESIGN CRITERIA BASED ON SEALANT MANUFACTURERS GUIDELINES.

WOOD OPTION 1

STAMP
CHRISTOPHER STANTON
LICENSE
No 69316
STATE OF
FLORIDA
PROFESSIONAL ENGINEER

ENGINEER:
STANTON ENGINEERING, INC.
2101 NW BOCA RATON BLVD. SUITE #115
BOCA RATON, FL. 33431
561-393-1003
FLA. P.E. #69316

CHAMPION GLASS INC
4720 NW 15TH AVENUE, UNIT 4A,
FT. LAUDERDALE, FL. 33309
954-564-3435 · CHAMPION-GLASS.NET

PRODUCT:
"HOTEL SERIES 450"
ALUM. INTEGRAL WINDOW/PTAC LOUVER SYSTEM
(IMPACT RATED)

PRODUCT APPROVAL #:
FL #46572.1

SCALE: NOTED
DATE: 07/06/2026
DWG NO. CHGL-450-2026

SHEET No:
06 OF 12

NOTE:
SHIM SPACE AT HEAD AND SILL CAN BE UP TO 1/4" WITHOUT REQUIRING ADDITIONAL ENGINEERING.

A

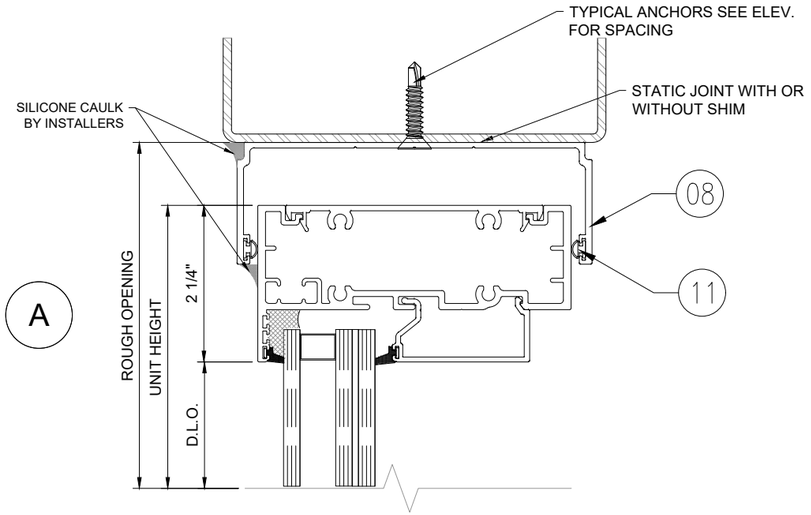

B

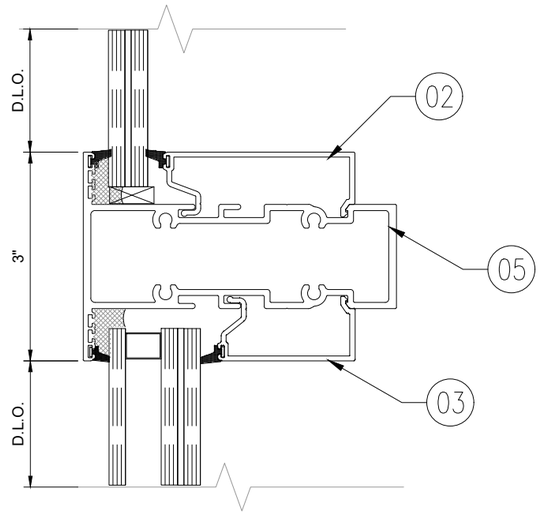

C

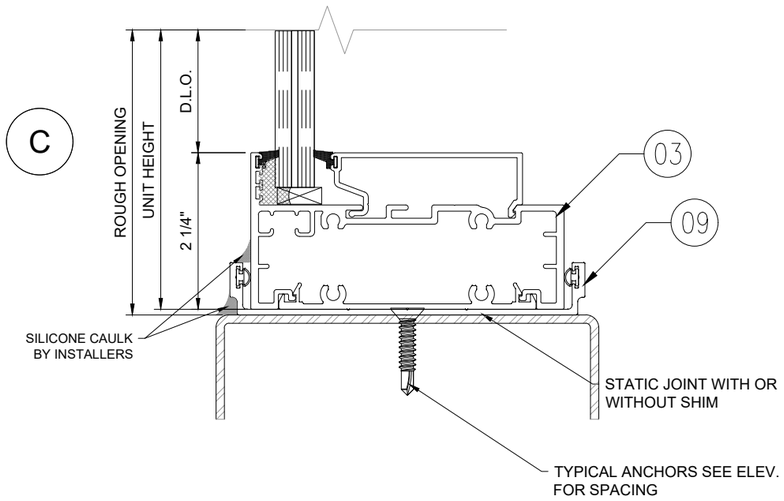

D

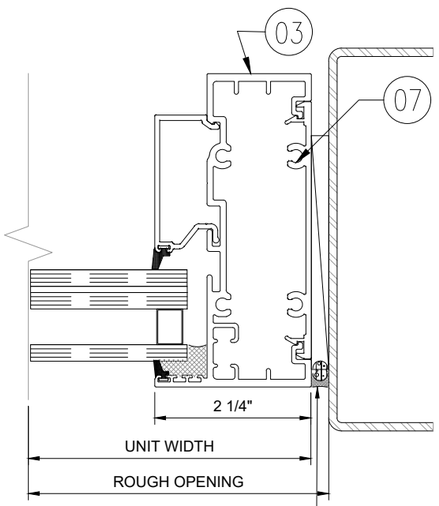

SILICONE SEALANT DOWSIL 790 OR EQUAL
NOTE:
ALTERNATE SEALANT SHALL BE DESIGNED BY A FLORIDA LICENSED ENGINEER FOR PROJECT SPECIFIC DESIGN CRITERIA BASED ON SEALANT MANUFACTURERS GUIDELINES.

STEEL OPTION 1

STAMP
CHRISTOPHER STANTON
LICENSE
No 69316
STATE OF
FLORIDA
PROFESSIONAL ENGINEER

ENGINEER:
STANTON ENGINEERING, INC.
2101 NW BOCA RATON BLVD. SUITE #115
BOCA RATON, FL. 33431
561-393-1003
FLA. P.E. #69316

CHAMPION GLASS INC
4720 NW 15TH AVENUE, UNIT 4A,
FT. LAUDERDALE, FL. 33309
954-564-3435 · CHAMPION-GLASS.NET

PRODUCT:
"HOTEL SERIES 450"
ALUM. INTEGRAL WINDOW/PTAC
LOUVER SYSTEM
(IMPACT RATED)

PRODUCT APPROVAL #:
FL #46572.1

SCALE: NOTED
DATE: 07/06/2026
DWG NO. CHGL-450-2026

SHEET No:
07 OF 12

NOTE:
SHIM SPACE AT JAMBS CAN BE UP TO 1/4" WITHOUT REQUIRING ADDITIONAL ENGINEERING.

F

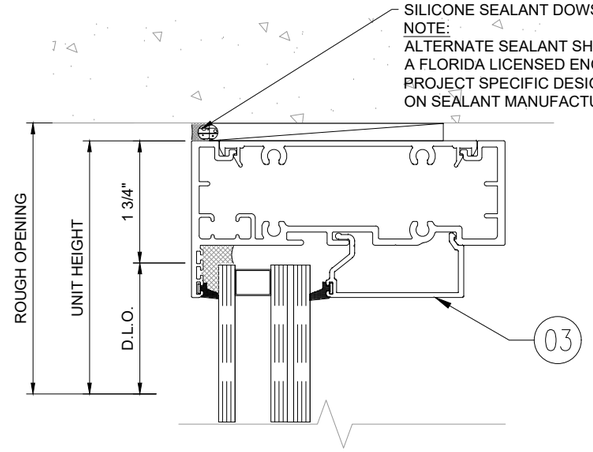

B

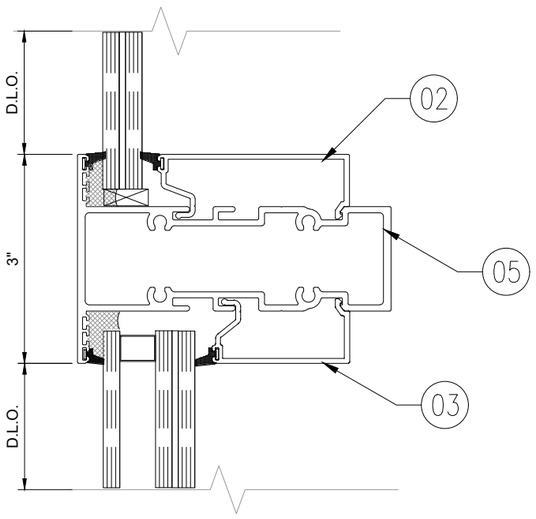

G

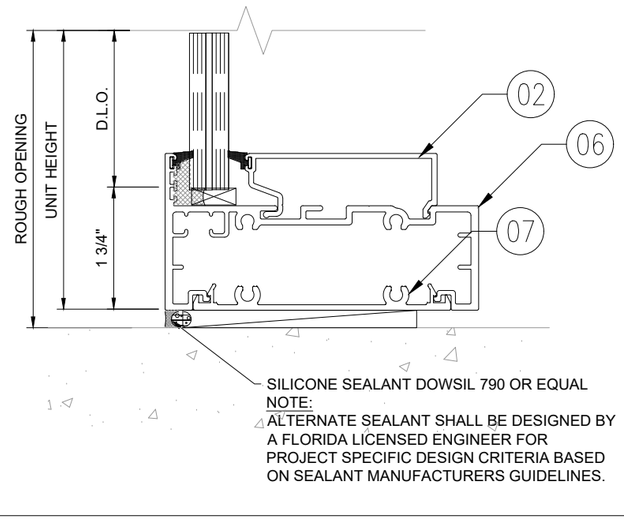

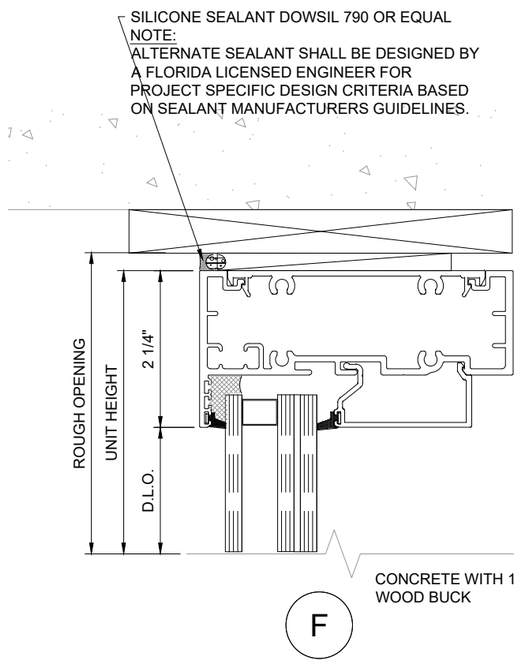

F

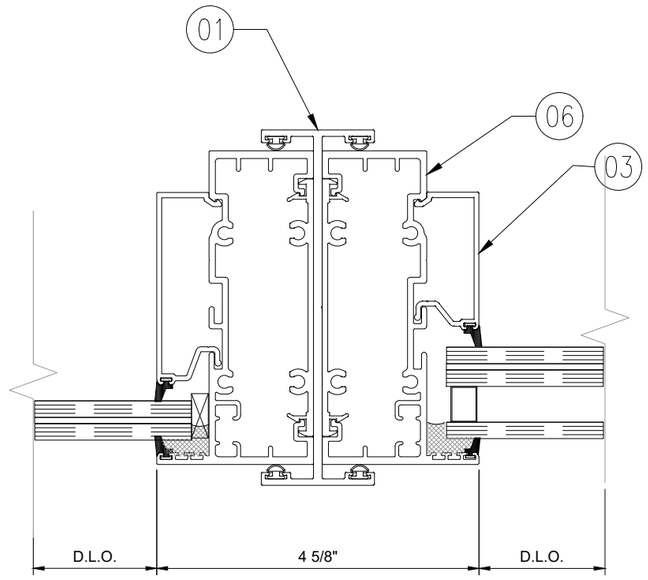

E

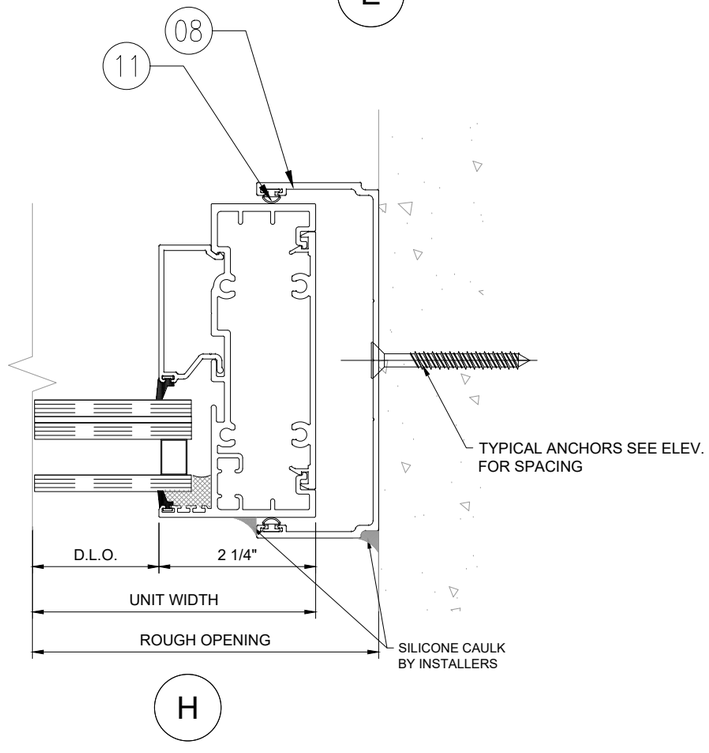

H

CONCRETE OPTION 2

STANTON ENGINEERING, INC.
2101 NW BOCA RATON BLVD. SUITE #115
BOCA RATON, FL. 33431
561-393-1003
FLA. P.E. #69316

CHAMPION GLASS INC
4720 NW 15TH AVENUE, UNIT 4A,
FT. LAUDERDALE, FL. 33309
954-564-3435 · CHAMPION-GLASS.NET

PRODUCT:
"HOTEL SERIES 450"
ALUM. INTEGRAL WINDOW/PTAC LOUVER SYSTEM
(IMPACT RATED)

PRODUCT APPROVAL #:
FL #46572.1

SCALE: NOTED
DATE: 07/06/2026
DWG NO.: CHGL-450-2026
SHEET No: 08 OF 12

F

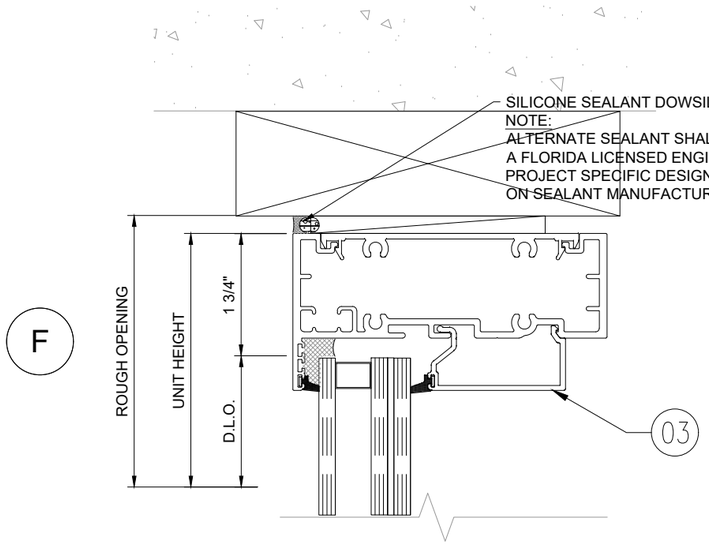

NOTE:
SHIM SPACE AT JAMBS CAN BE UP TO 1/4" WITHOUT REQUIRING ADDITIONAL ENGINEERING.

B

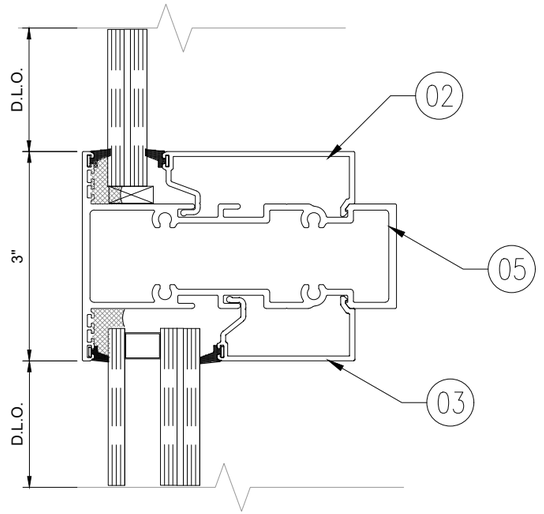

G

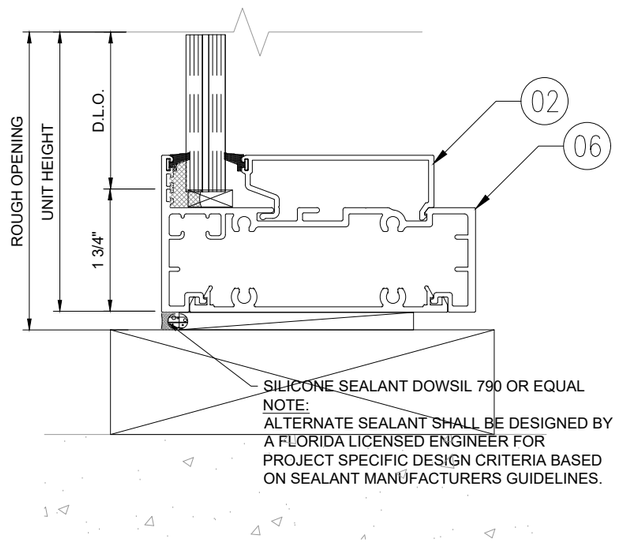

H

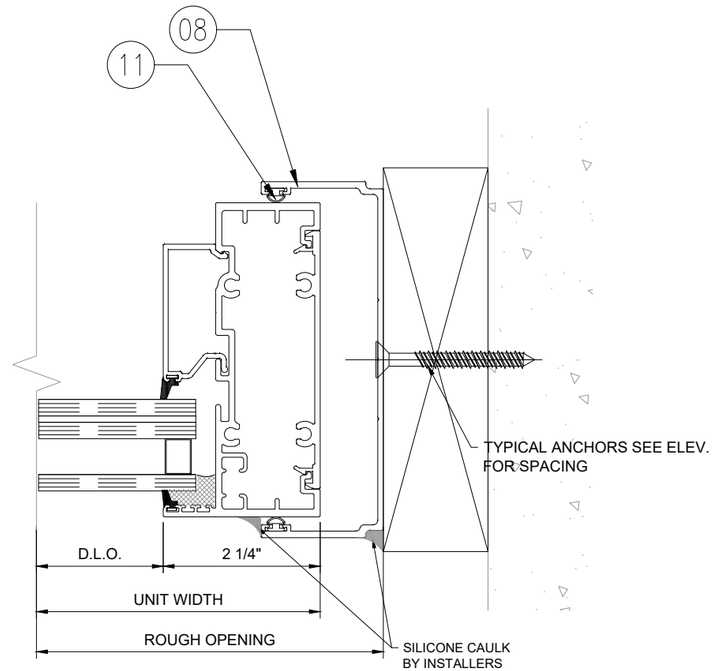

WOOD

OPTION 2

STAMP
CHRISTOPHER STANTON
LICENSE
No 69316
STATE OF
FLORIDA
PROFESSIONAL ENGINEER

ENGINEER:
STANTON ENGINEERING, INC.
2101 NW BOCA RATON BLVD. SUITE #115
BOCA RATON, FL. 33431
561-393-1003
FLA. P.E. #69316

CHAMPION GLASS INC
4720 NW 15TH AVENUE, UNIT 4A,
FT. LAUDERDALE, FL. 33309
954-564-3435 · CHAMPION-GLASS.NET

PRODUCT:
"HOTEL SERIES 450"
ALUM. INTEGRAL WINDOW/PTAC LOUVER SYSTEM
(IMPACT RATED)

PRODUCT APPROVAL #:
FL #46572.1

SCALE: NOTED
DATE: 07/06/2026
DWG NO. CHGL-450-2026

SHEET No:
09 OF 12

F

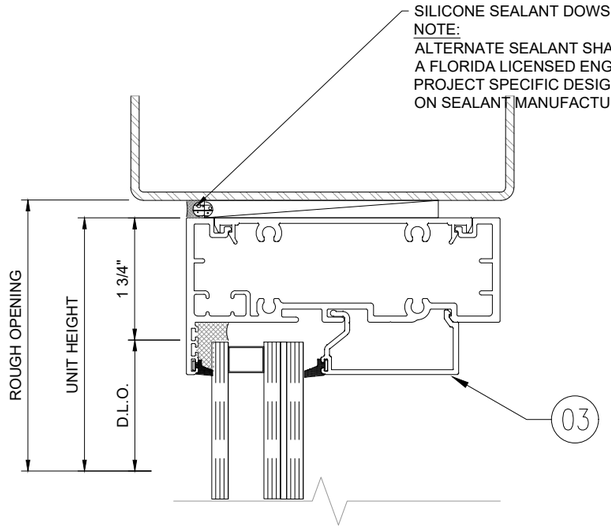

G

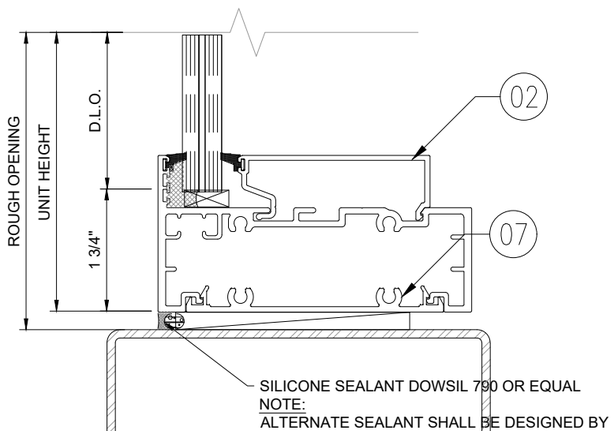

NOTE:
SHIM SPACE AT JAMBS CAN BE UP TO 1/4" WITHOUT REQUIRING ADDITIONAL ENGINEERING.

B

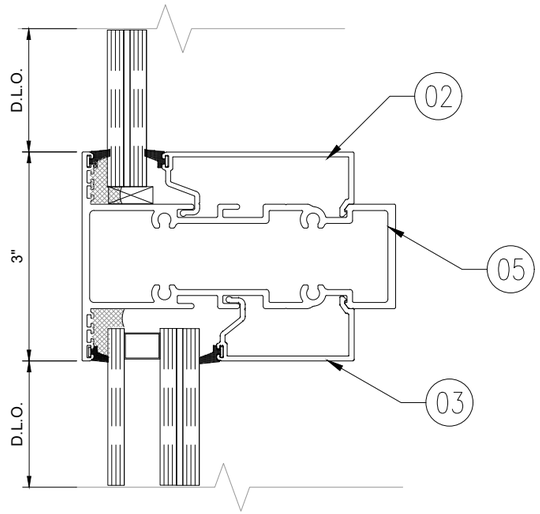

H

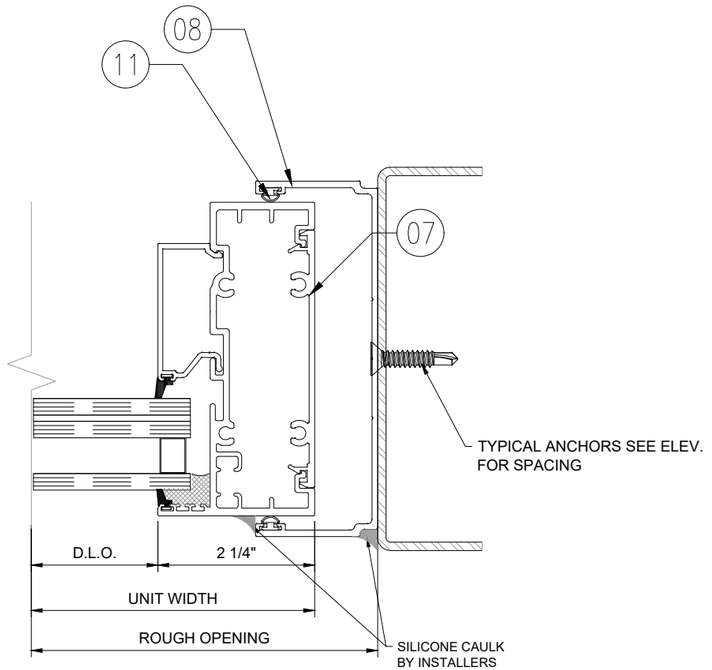

STEEL

OPTION 2

STANTON CHRISTOPHER STANTON LICENSE No 69316 STATE OF FLORIDA PROFESSIONAL ENGINEER

ENGINEER:
STANTON ENGINEERING, INC.
2101 NW BOCA RATON BLVD. SUITE #115
BOCA RATON, FL. 33431
561-393-1003
FLA. P.E. #69316

CHAMPION GLASS INC
4720 NW 15TH AVENUE, UNIT 4A,
FT. LAUDERDALE, FL. 33309
954-564-3435 · CHAMPION-GLASS.NET

PRODUCT:
"HOTEL SERIES 450"
ALUM. INTEGRAL WINDOW/PTAC LOUVER SYSTEM
(IMPACT RATED)

PRODUCT APPROVAL #:
FL #46572.1

SCALE: NOTED
DATE: 07/06/2026
DWG NO. CHGL-450-2026

SHEET No: 10 OF 12

NOTE:
SHIM SPACE AT HEAD AND SILL CAN BE UP TO 1/2" WITHOUT REQUIRING ADDITIONAL ENGINEERING.

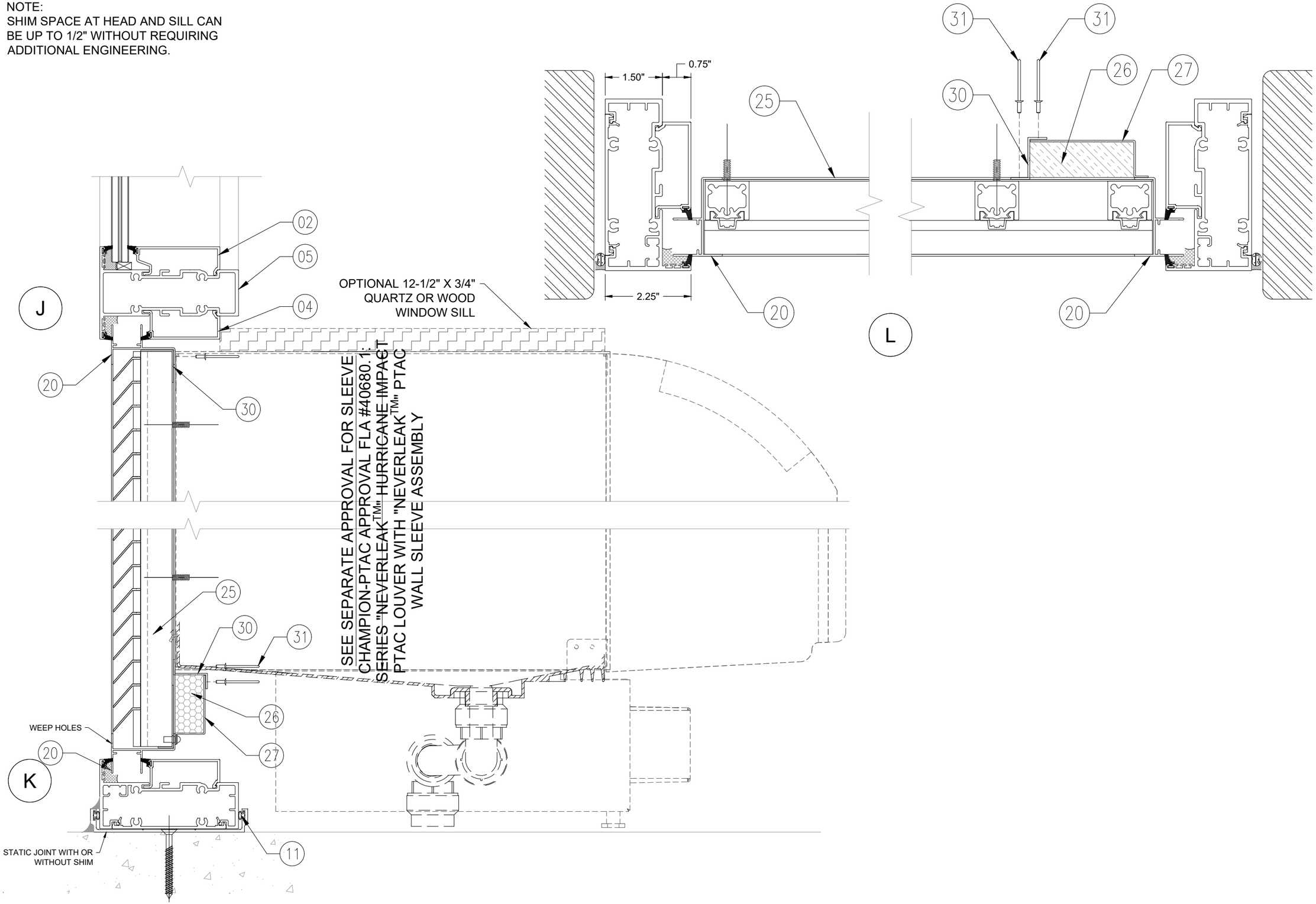

STAMP:
CHRISTOPHER STANTON
LICENSE
No 69316
STATE OF
FLORIDA
PROFESSIONAL ENGINEER

ENGINEER:
STANTON ENGINEERING, INC.
2101 NW BOCA RATON BLVD. SUITE #115
BOCA RATON, FL. 33431
561-393-1003
FLA. P.E. #69316

CHAMPION GLASS INC
4720 NW 15TH AVENUE, UNIT 4A,
FT. LAUDERDALE, FL. 33309
954-564-3435 · CHAMPION-GLASS.NET

PRODUCT:
"HOTEL SERIES 450"
ALUM. INTEGRAL WINDOW/PTAC LOUVER SYSTEM
(IMPACT RATED)

PRODUCT APPROVAL #:
FL #46572.1

SCALE: NOTED
DATE: 07/06/2026
DWG NO. CHGL-450-2026
SHEET No: 11 OF 12

BILL OF MATERIALS

NO.	NO.	DESCRIPTION	MATERIAL	MANUFACTURER
01	CHGL-25	VERTICAL H MULLION	ALLOY 6063-T6	CHAMPION GLASS
02	CHGL-27	GLASS STOP FOR 9/16 GLASS	ALLOY 6063-T6	CHAMPION GLASS
03	CHGL-28	GLASS STOP FOR 1-5/16 GLASS	ALLOY 6063-T6	CHAMPION GLASS
04	CHGL-29	GLASS STOP FOR 1 GLASS	ALLOY 6063-T6	CHAMPION GLASS
05	CHGL-30	HORIZONTAL MULLION W/3 VINYL SLOTS	ALLOY 6063-T6	CHAMPION GLASS
05.1	CHGL-30	HORIZONTAL MULLION W/1 VINYL SLOT	ALLOY 6063-T6	CHAMPION GLASS
06	CHGL-31	HEAD/SILL/JAMB	ALLOY 6063-T6	CHAMPION GLASS
07	CHGL-32	SNAP-IN	ALLOY 6063-T6	CHAMPION GLASS
08	CHGL-9	HEAD RECEPTOR (PATENT # 11,414,914 B2)	ALLOY 6063-T6	CHAMPION GLASS
09	CHGL-21	SILL RECEPTOR (PATENT # 11,414,914 B2)	ALLOY 6063-T6	CHAMPION GLASS
10	CHGL-G33	GLAZING VINYL	SANTOPRENE_PROPOLENE	MELTPOINT
11	CHGL-G36	RECEPTOR VINYL	TPV_PROPOLENE	MELTPOINT
12	CHGL-S34	FABRICATION SCREWS	ST. STEEL	12X1.5
13	CHGL-SB35	SETTING BLOCKS	TPV	.25 X 1.25 X 4
14	-	983 DOW CORNING	-	-

NOTE:
THE RECEPTORS AND INSTALLATION PROCESS IS COVERED UNDER THE PATENT #11,414,914 B2

BILL OF MATERIALS

NO.	DESCRIPTION	MATERIAL	MANUFACTURER
20	GLAZING LOUVER	ALUM 6063-T5	CHAMPION PTAC
21	BRACE BAR	ALUM 6063-T5	CHAMPION PTAC
22	BRACE BAR SPLINE	ALUM 6063-T5	CHAMPION PTAC
23	LOUVER BLADE	ALUM 6063-T5	CHAMPION PTAC
24	CORNER ANGLE	ALUM 6063-T5	CHAMPION PTAC
25	FRONT BLANK-OFF (OPTIONAL)	MIN. 0.04" THK FORMED ALUM.	-
26	INSULATION (OPTIONAL)	1" THK FIRE RESISTANT FOAM-TOUGHGARD 2	CERTAIN TEED
27	REAR BLANK-OFF (OPTIONAL)	MIN. 0.04" THK FORMED ALUM.	-
28	T-FLASHING	MIN. 0.04" THK FORMED ALUM.	-
29	L-ANGLE	MIN. 0.04" THK FORMED ALUM.	-
30	Z-ANGLE	MIN. 0.04" THK FORMED ALUM.	-
31	1/8 " POP-RIVET (AS42CE)	ALUMINUM/STEEL	-
-	-	-	-

NOTE:
FOAM, ITEM #26, SHALL COMPLY WITH MINIMUM REQUIREMENTS OF HVHZ SECTION 2612 OF FLORIDA BUILDING CODE (ASTM d1929 & ASTM E84) AND/OR APPROVED UNDER CURRENT NOA.

STAMP:
CHRISTOPHER STANTON
LICENSE
No 69316
STATE OF
FLORIDA
PROFESSIONAL ENGINEER

ENGINEER:
STANTON ENGINEERING, INC.
2101 NW BOCA RATON BLVD. SUITE #115
BOCA RATON, FL. 33431
561-393-1003
FLA. P.E. #69316

CHAMPION GLASS INC
4720 NW 15TH AVENUE, UNIT 4A,
FT. LAUDERDALE, FL. 33309
954-564-3435 · CHAMPION-GLASS.NET

PRODUCT:
"HOTEL SERIES 450"
ALUM. INTEGRAL WINDOW/PTAC
LOUVER SYSTEM
(IMPACT RATED)

PRODUCT APPROVAL #:
FL #46572.1

SCALE: NOTED

DATE: 07/06/2026

DWG NO. CHGL-450-2026

SHEET No:
12 OF 12